DWG. SIZE	DWG. NO.
D	095–3713

REVISIONS

SYM.	E.C.O.	DATE	APVD.
A	RELEASED TO PRODUCTION	5/8/26	AN

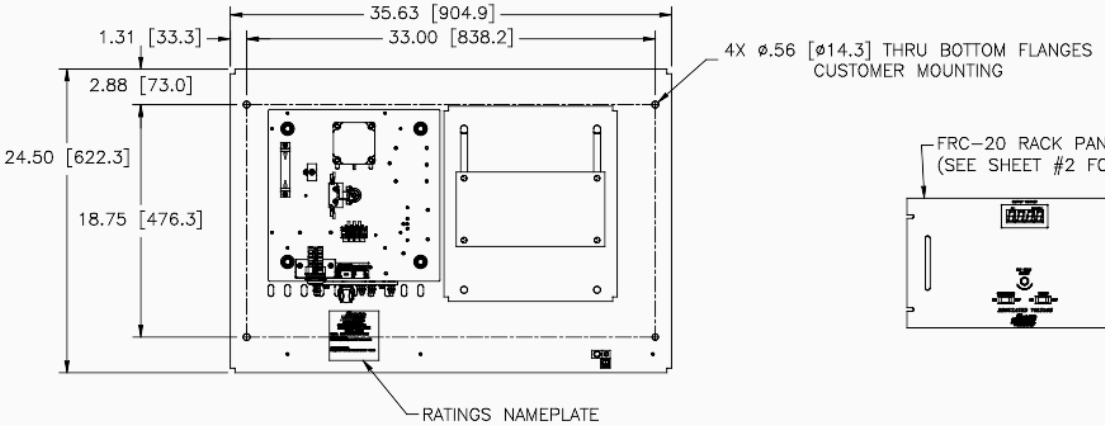

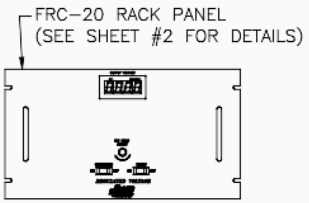

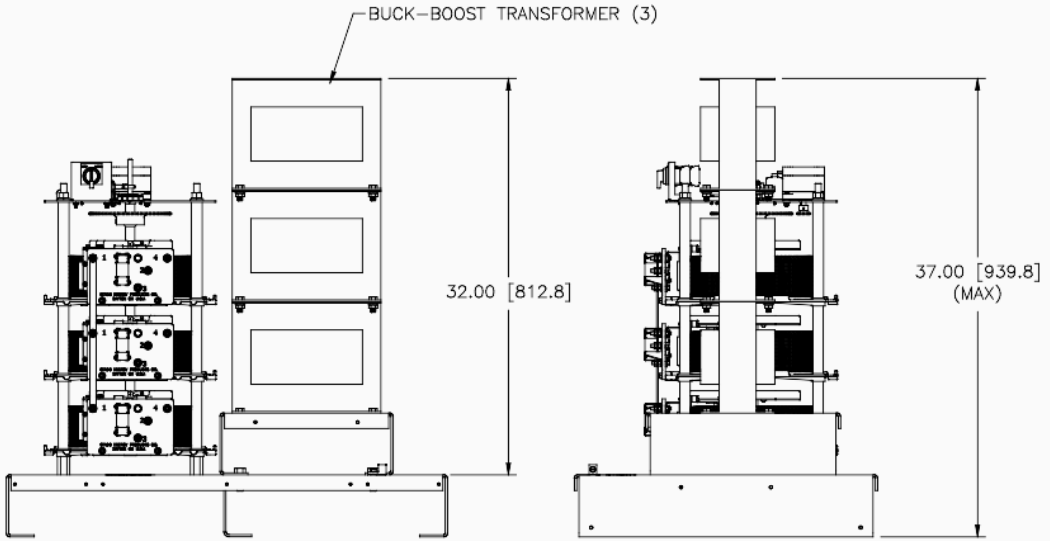

THE REGULATOR COMPRISES A MOTOR–DRIVEN VARIABLE AUTOTRANSFORMER, BUCK–BOOST FIXED RATIO TRANSFORMERS, A MANUAL RAISE/LOWER SWITCH AND A SOLID STATE CONTROL UNIT THAT AUTOMATICALLY POSITIONS THE AUTOTRANSFORMER TO HOLD THE OUTPUT VOLTAGE CONSTANT. A 0–600 VOLT DIGITAL VOLTMETER IS PROVIDED. THE WIRING FOR THIS REGULATOR IS TO BE COMPLETED BY THE MANUFACTURER ACCORDING TO SCHEMATIC 670–4548.

SPECIFICATIONS:

WAVEFORM DISTORTION----------ZERO ADDED
FREQUENCY RANGE---------- 57 HZ TO 63 HZ
ACCURACY----------±1%
INTERNAL IMPEDANCE----------LESS THAN 1%
CORRECTION RATE----------28 VOLTS/SECOND
PHASE SHIFT---------- NEGLIGIBLE
EFFICIENCY---------- 97% TYPICAL
TEMPERATURE RANGE----------0°C (32°F) TO +40°C (104°F)
MOTOR SPEED----------5 SECONDS

WIRE RANGES FOR CUSTOMER WIRING:
SEE SCHEMATIC 670–4548 FOR TERMINAL CONNECTIONS.

CONTROLS:

CONTROLLER ON/OFF SWITCH: THIS SWITCH TURNS OFF POWER TO THE CONTROLLER AND DIGITAL VOLTMETER.

MOTOR ON/OFF SWITCH: THIS SWITCH TURNS OFF POWER TO THE CONTROLLER OUTPUT.

OUTPUT ADJUSTMENT: THIS POTENTIOMETER CONTROL IS ROTATED CLOCKWISE TO INCREASE OUTPUT VOLTAGE SET POINT AND COUNTERCLOCKWISE TO DECREASE THE OUTPUT VOLTAGE SET POINT.

VOLTMETER: THE DIGITAL VOLTMETER INDICATES THE REGULATED OUTPUT VOLTAGE SETTING.

RAISE/LOWER SWITCH: THIS SWITCH IS LOCATED ON THE MOTOR PLATE. THE SWITCH ALLOWS THE REGULATOR TO BE MANUALLY CONTROLLED.

NOTE:
SEE THE FRC–20 USER'S HANDBOOK, FORM #003–1922 FOR DETAILED INFORMATION.

** AT NOMINAL OUTPUT VOLTAGE. INPUT VOLTAGE RANGE SHIFTS PROPORTIONALLY WITH OUTPUT VOLTAGE SETTINGS.

4 WIRE INPUT/OUTPUT			
THREE PHASE (SINGLE LINE CONTROL) 60Hz			
OUTPUT VOLTAGE (ADJUSTMENT)	INPUT VOLTAGE RANGE **	MAXIMUM OUTPUT AMPERES	RATED OUTPUT (KVA)
208Y/120V	166–229	125	45

UNLESS OTHERWISE SPECIFIED, TOLERANCE IS ± DECIMALS .X .XX .XXX / HOLES .12 .005 / ANGLES ± 1° / DRAFT 1–1/2°
MATERIAL ±
UNITS IN [mm]
ALL DIMENSIONS APPLY AFTER PLATING

TITLE: SPEC. CONTROL DRAWING AUTO. VOLTAGE REGULATOR AVR–20WCYY045–OEM

The information and design disclosed herein was originated by and is the property of STACO ENERGY PRODUCTS CO., which reserves all patent, proprietary, design, manufacturing, reproduction, use and sale rights thereto, and to any article disclosed therein except to the extent rights are expressly granted to others. The foregoing does not apply to vendor proprietary parts.

DRAWN BY A.NEICK	DATE 5/8/26	FIRST USED ON	DO NOT SCALE DWG.
CHECKED L.BRAGG	DATE 5/8/26	WEIGHT APPROX.	CAGE CODE 83008
ENGINEER L.BRAGG	DATE 5/8/26	SCALE N/A	SHEET 1 OF 2

STACO ENERGY PRODUCTS CO.
A Subsidiary of Electronic Controls Corporation
Entertainment Drive Mounting 800-426-8126 USA

DWG. SIZE D — DWG. NO. 095–3713

SIZE	DWG. NO.
D	095-3713

REVISIONS

SYM.	E.C.O.	DATE	APVD.
A	RELEASED TO PRODUCTION	5/8/26	AN

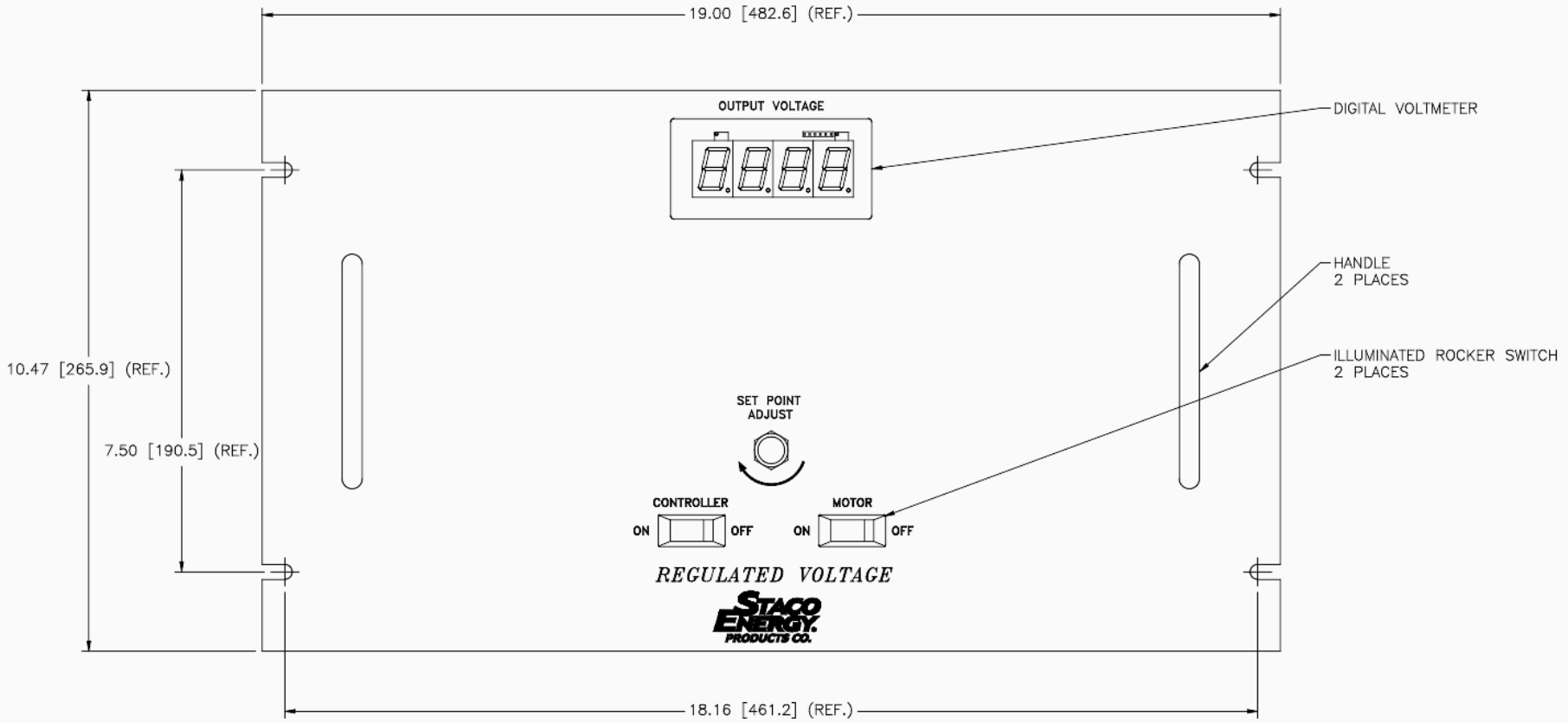

UNLESS OTHERWISE SPECIFIED, TOLERANCE IS ±
DECIMALS .X ±.010 .XX ±.005 .XXX ±.005
HOLES ±.005
ANGLES ±1°
DRAFT 1-1/3°
MATERIAL:
UNITS IN [mm]
ALL DIMENSIONS APPLY AFTER PLATING

The information and design disclosed herein was originated by and is the property of STACO ENERGY PRODUCTS CO., which reserves all patent, proprietary, design, manufacturing, reproduction, use and sale rights thereto, and to any article disclosed therein except to the extent rights are expressly granted to others. The foregoing does not apply to vendor proprietary parts.

TITLE: SPEC. CONTROL DRAWING
AUTO. VOLTAGE REGULATOR
AVR-20WCSY045-OEM

DRAWN BY A.NEICK	DATE 5/8/26	FIRST USED ON	DO NOT SCALE DWG.
CHECKED L.BRAGG	DATE 5/8/26	WEIGHT APPROX.	CAGE CODE 83008
ENGINEER L.BRAGG	DATE 5/8/26	SCALE N/A	SHEET 2 OF 2

STACO ENERGY PRODUCTS CO.
A Subsidiary of Amphenol Corporation
Electromechanical Manufacturing 800-426-8 USA

SIZE D DWG. NO. 095-3713