STACO E3 924

THREE PHASE EMERGENCY LIGHTING INVERTER SYSTEM (UL 924)

3.5 - 40 kW

APPLICATIONS INCLUDE

- Hyperscale Data Centers
- Educational/Storm
- Shelters Multi-Residential
- Industrial/ Manufacturing
- Parking Decks
- Healthcare Facilities
- Mass Transit
- Sports Arenas
- Hotels & Casinos

PRODUCT FEATURES

- **90-Minute Battery Runtime & On-Line Double Conversion**
  Provides backup power with consistent, high-quality output and no transfer time.
- **Wide Input Voltage (+20 / -17%) & Generator Compatibility (1:1)**
  Reliable operation with fluctuating input and seamless generator integration.
- **Precise Output Regulation (±1%) & < 4% VTHD @ 100% LED Load**
  Stable, clean power for sensitive devices and lighting.
- **Flexible Communication & Dry Contact Outputs**
  RS232/RS-485 for remote monitoring and easy integration with systems.

MORE FEATURES

CRITICAL INPUT WINDOW DESIGN

Wider input voltage tolerance significantly improves the life and performance of the emergency battery source. Preserving the batteries for actual emergencies leads to safer buildings.

OUTPUT REGULATION

Guarantees incoming utility power is clean and regulated, protecting sensitive systems.

LED DRIVER PROTECTION

The input voltage to LED Drivers should not exceed +/-10%. The Staco E3 life safety provides clean, conditioned and regulated (+/-1%) power to the drivers, maximizing lifespan and performance of the life safety system.

DOUBLE CONVERSION TECHNOLOGY

Mission-critical technology that continuously confirms performance status every second, compared to Standby Technology, which only checks once a month (if tested).

Operation:

—— Normal --- Standby —·— Maintenance

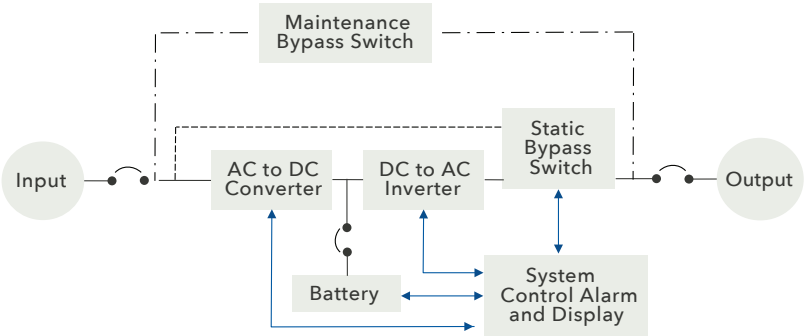

FRONT PANEL DISPLAY

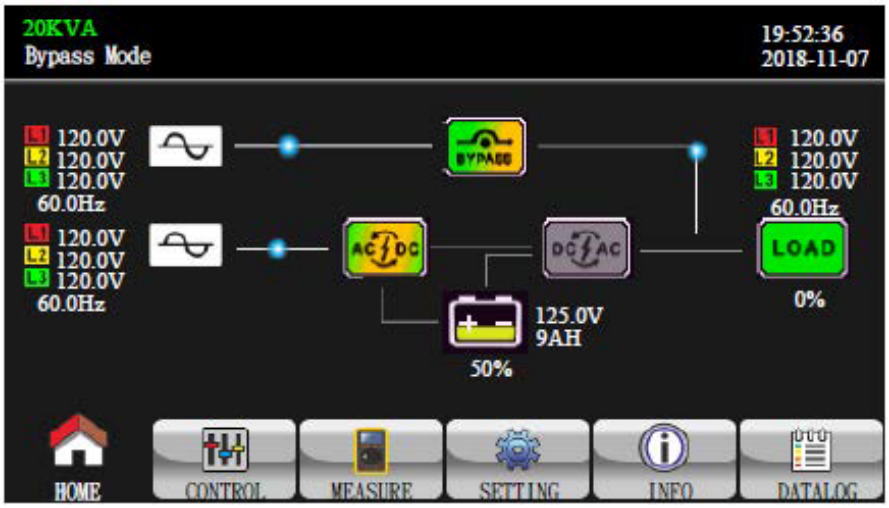

STACO E3 924

In the event of an AC power failure, the Staco E3 924 automatically supports the connected lighting loads on battery power and will continue to provide power without any interruption for the specified backup time. When the utility power returns to normal, Staco E3 924 will automatically recharge the batteries to be ready for the next power disturbance. In addition to meeting life safety requirements, the Staco E3 924 can also increase the life expectancy of the protected lighting system and reduce long-term cost of ownership.

TECHNICAL SPECIFICATIONS

GENERAL

- Online double-conversion with true sine wave output; continuous, no-break operation
- Internal maintenance and automatic system bypass; circuit breaker protection integrated with battery cabinet
- UL 924 listed (90-minute battery) for Emergency Lighting and Power Equipment; LCD front panel for monitoring and control

INPUT

- 208Y/120 VAC or 480Y/277 VAC (4-wire); optional 3-wire Delta
- (+20 -17%) voltage range; 60 Hz ±5%; full load walk-in (25–100%) in <5 sec
- <2% harmonic distortion at full load; surge protection per IEEE C62.41

OUTPUT

- IGBT true sine wave PWM inverter
- <2% THD (100% linear load); VTHD ≤ 4% at full LED load
- ±1% voltage regulation at full load; 50/60 Hz output frequency

BATTERY

- VRLA with 10-year design life at 77°F (25°C), 90-minute full load runtime
- Easy maintenance design

HOUSING

- Freestanding, NEMA 1 steel enclosure
- Front and left-side service access; bottom conduit Top/Rear entry available

ENVIRONMENTAL

- Operating temperature: 18°F (-8°C) to 104°F (40°C)
- Humidity: 0-95% non-condensing
- Audible Noise: 67dBA at 3 feet

MONITORING/COMMUNICATIONS

- Front panel 3x5" LCD display for system status and alarms
  RS-232/RS-485, dry contacts, remote monitoring
- SNMP (optional), MODBUS TCP/IP & BACNET (optional)
- MODBUS RTU (standard)

WHAT IS AN EMERGENCY LIGHTING SYSTEM?

The Staco E3 924 Centralized Emergency Lighting Inverter is UL 924 listed as Emergency Lighting Equipment and Auxiliary Lighting and Power Equipment, and is compliant with NFPA 101® Life Safety Code®, which requires a minimum of 90 minutes of emergency illumination during a power failure.

This centralized system offers a single point for power connection, monitoring, and management—reducing maintenance and testing costs compared to individual units, while enhancing safety, security, and protection of critical loads such as fire systems and data equipment. *Copies of summaries of these NFPA Codes are available upon request.

STACO E3 924

TECHNICAL SPECIFICATIONS

UPS Rating kVA/kW (Unity Power Factor)		3.5	5	7.5	10	15	20	30	40
Input									
Topology		Online Double Conversion w/ Output Unity Power Factor							
Voltage		208/120VAC, 3 Phase, 4 wire plug Ground. 220/127VAC configurable from front panel 480/277VAC 4 wire plus Ground, 480VAC 3 wire (Delta)							
Range		+20% / -17% Battery Discharge							
Frequency		60/50 Hz +/- 5.0 Hz							
Power Factor		0.99 at 100% load, 0.98 minimum at 50% load							
Current Distortion		<2% @ 100% load							
Input Current A (208/120V)	Maximum:	13	19	29	39	59	78	117	156
Input Current Inrush		Walk-in from 25% maximum to 100% full load rating in 5 seconds							
Output									
Voltage		208/120VAC, 3 Phase, 4 wire plug Ground. 220/127VAC configurable from front panel. 480/277VAC 4 wire plus Ground							
Static Voltage Regulation		+/- 1%							
Voltage Transient Response		Voltage transient response shall not exceed the following, and shall recover to 95% within 10 milliseconds: a) <5% RMS for 100% step load b) +/- 1% (loss or return of AC input)							
Frequency (Inverter Synchronouous)		60/50 Hz (tracks frequency of static bypass source) +/- 0.5, 1.0, 2.0, 5.0 Hz (user settable)							
Frequency Slew Rate (Inverter Synchronized to Static Bypass)		Adjustable 0.1 to +/- 10 Hz per second							
Free Running Frequency (on battery or asynchronous)		60/50 Hz +/-0.01 Hz							
Voltage Distortion THD		Less than 2% (Linear load), less than 4% with crest factor 3 to 1							
Inverter Overload		110-130% for 1 Minute >130% for 1 second							
Bypass Overload		>130%: 1 Minute. <130%: Continuous							
Bypass Input - Range Synchronization Voltage		+12%/ -15%							
Bypass Input Frequency Tracking Range		+/- 5 Hz							
Overall Efficiency		Up to 94%							
Output Current (A) @ 208/120V		10	14	21	28	42	56	83	111
Heat Rejection (BTU/Hr) @ 208/120V		1100	1500	2300	3900	5800	7700	11600	15400
Battery									
Battery Type		VRLA Sealed Valve Regulated - 20 Batteries , Center Tap Design. NiCAD available							
Voltage		240v DC Nominal, 273v DC Float							
Communications									
SNMP Web		SNMP Card & UPS PowerView Pro Shutdown and Monitoring Software for Windows/Novell							
Modbus		Monitoring & Control vis RS-485/RTU Protocol/ or TCP/IP w/ card. Read Holding and Write Registers							
BACnet		Through SNMP Card, BACnet is offered w/ Card.							
Relays		(6) Form "C" contacts 30v AC/DC 1A							
Standards									
Agency Listings		UL 924 Emergency Lighting & Power Equipment, UL 924 Auxiliary Lighting & Power Equipment (OUST), UL1778, cUL to CSA C22.2. NEMA E-1, ASME, ASA-C-39.1.1980, FCC Part 15 Class B, OSHA, IEEE587m ANSI C62.41-1980, ISO9000							

PRODUCT SELECTION CONVENTION

EXAMPLE MODEL NUMBER

E3	T	03	1B	-	2Y-2Y	AA	-	A	A	0	D	1	B	-	S	S	1	T
Model	Runtime	Capacity	Int Batt		Voltage			Comm	TCE	Option	Distribution				External MBS[1]			

Model	Runtime	Capacity	Int Batt	Input/Output Voltage	Bypass Voltage	Comm	Cable Entry	Option	Dist	Breaker Qty	Breaker Type	MBS Layout	MBS KAIC	BFP	BPOPT
E3	U UL 924 T OUST	03 3.5 kW 05 5.0 kW 07 7.5 kW 10 10 kW 15 15 kW 20 20 kW 30 30 kW 40 40 kW	A0 No Batt UU UL 924 Batt 1B 1 String B0 2 Strings BB 3 Strings 1C 1 String C0 2 Strings CC 3 Strings	2Y-2Y 208/120v In/Out 2D-2Y 208v In, 208/120v Out 4Y-2Y 480/277v In, 208/120v Out 4D-4Y 480v In, 480/277v Out 4Y-4Y 480/277v In, 480/277v Out	AA Single Input Contact factory for other Configs[2]	0 None A SNMP B EMTKit	0 None A Top Cable Entry	0 None 1 ANSI 61 Grey paint 2 Smoke Detector 3 SPD 4 Smoke Detector + SPD Contact factory for other Configs[2]	D Sidecar 0 None	0 None 1 1 2 2 3 3 4 4 5 5 6 6 7 7 8 8 9 9 A 10 B 11 C 12 D 13 E 14 F 15 G 16 H 17 I 18 J 19 K 20 L 21 M 22 N 23 P 24 Q 25 S 27 T 28 U 29 V 30	A None B 15A 1-pole C 15A 2-pole D 15A 3-pole E 20A 1-pole F 20A 2-pole G 20A 3-pole H 30A 1-pole J 30A 2-pole K 30A 3-pole L 40A 1-pole M 40A 2-pole N 40A 3-pole Q 50A 1-pole R 50A 2-pole S 50A 3-pole T 60A 1-pole U 60A 2-pole V 60A 3-pole	S 3 Brkr MBS D Dual Input-4 Brkr L Load bank-4 Brkr	S 18/22 A 10 B 22 C 35 D 65 F 100	S SKRU-KK 1 Kirk Key 2 Interlock Plate	S None T SPD

[1] External MBS is available as an optional add-on

BATTERY CARE SYSTEM

The Staco E3 924 uses the Battery Care System which optimizes battery performance while extending battery life.

WARRANTY

ELECTRONICS

A full Two Year On-site Warranty (Continental U.S., Canada or Mexico)

BATTERY

Three (3) Year Full, Limited Warranty, on the Battery System ensures that your batteries are protected from system failure now and in the future. (Warranty provided by battery manufacturer.) Extended warranties, customized service and preventative maintenance plans are also available. Please refer to our warranty statement for complete details.

STACO E3 924

3.5 kW, 5 kW, 7 kW & 10 kW MODELS

Model kW	ELI Dimensions	Battery Dimensions	Total Cabinets	System Dimensions (H" x W" x D")	System Weight Lbs.	Voltage
3.5 kW						
E3U03	72.44" x 23.13" x 40.5"	Internal	1	72.44" x 23.13" x 40.5"	1,228	2Y-2Y
					1,438	4D-2Y
					1,538	4D-4Y
					1,428	4Y-4Y
5 kW						
E3U05	72.44" x 23.13" x 40.5"	Internal	1	72.44" x 23.13" x 40.5"	1,528	2Y-2Y
		72.39" x 26.31" x 31.74"	2		1,791	4D-2Y
					2,101	4D-4Y
					1,891	4Y-4Y
7 kW						
E3U07	72.44" x 23.13" x 40.5"	72.39" x 26.31" x 31.74"	2	72.44" x 23.13" x 40.5"	2,165	2Y-2Y
					2,375	4D-2Y
					2,475	4D-4Y
					2,365	4Y-4Y
10 kW						
E3U10	72.44" x 23.13" x 40.5"	72.39" x 26.31" x 31.74"	2	72.44" x 23.13" x 40.5"	2,554	2Y-2Y
					2,764	4D-2Y
					2,864	4D-4Y
					2,754	4Y-4Y

STACO E3 924

15 kW, 20 kW, 30 kW &40 kW MODELS

Model kW	ELI Dimensions	Battery Dimensions	Total Cabinets	System Dimensions (H" x W" x D")	System Weight Lbs.	Voltage
15 kW						
E3U15	72.44" x 23.13" x 40.5"	59" x 29" x 31.5"	2	72.44" x 52.13" x 40.5"	3,168	2Y-2Y
					3,468	4D-2Y
					3,668	4D-4Y
					3,618	4Y-4Y
20 kW						
E3U20	72.44" x 23.13" x 40.5"	78.74" x 36" x 29.5"	2	78.74" x 59.13" x 40.5"	4,168	2Y-2Y
					4,518	4D-2Y
					4,748	4D-4Y
					4,678	4Y-4Y
30 kW						
E3U30	72.44" x 23.13" x 40.5"	78.74" x 36" x 29.5"	2	78.74" x 59.13" x 40.5"	5,408	2Y-2Y
					5,838	4D-2Y
					6,103	4D-4Y
					5,938	4Y-4Y
40 kW						
E3U40	72.44" x 23.13" x 40.5"	78.74" x 72" x 31.5"	3	78.74" x 95.13" x 40.5"	7,528	2Y-2Y
					7,978	4D-2Y
					8,248	4D-4Y
					8,068	4Y-4Y

STACO SERVICE

FIELD SERVICE PROGRAM

Staco specializes in providing choice and flexibility by developing tailored solutions for preventive and remedial maintenance services, as well as emergency repairs for all of our products. Staco Service is built upon a nationwide network of highly trained and motivated customer support engineers and technicians who can provide professional services and care throughout the life of your equipment.

- Start-Ups
- Preventive Maintenance
- Spare Parts
- Battery Analysis/Refresh/Replacement
- On-Site Training
- Time & Material Services

WHY STACO ENERGY PRODUCTS?

BECAUSE WE ARE YOUR CUSTOM POWER SOLUTIONS PROVIDER!

Unique application design demands, harsh environment concerns, the need to meet non-standard physical space requirements; providing the "not so usual" is what we do best. From leading edge uninterruptible power supplies, power conditioners, power factor and harmonic correction equipment, to the world's most stable voltage control systems, we have the technology you need to protect and manage your business, and the knowledge to make it work for you.

Since 1937, customers worldwide have relied on Staco Energy as their custom solutions provider, to solve a wide range of electrical power problems. Headquartered in Miamisburg, Ohio, Staco Energy Products is a wholly owned subsidiary of Components Corporation of America, located in Dallas, Texas.

Voltage Control | UPS & Emergency Lighting

STACO ENERGY PRODUCTS CO.

E3924_bro-260911

Contact Us:
US Toll Free: 866-261-1191
Phone: 937-253-1191
E-mail: sales@stacoenergy.com