DWG. SIZE	DWG. NO.
D	090-3159

REVISIONS

SYM.	E.C.O.	DATE	APVD.
A	RELEASE TO PRODUCTION	5/14/25	

TOP VIEW
REAR

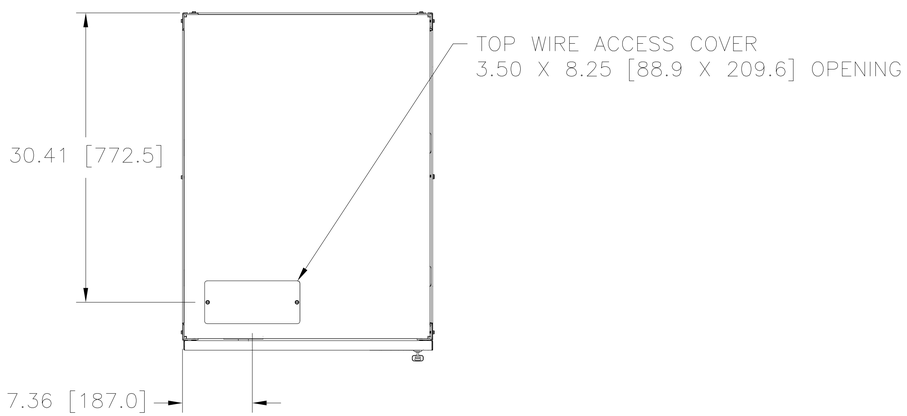

BOTTOM VIEW
REAR

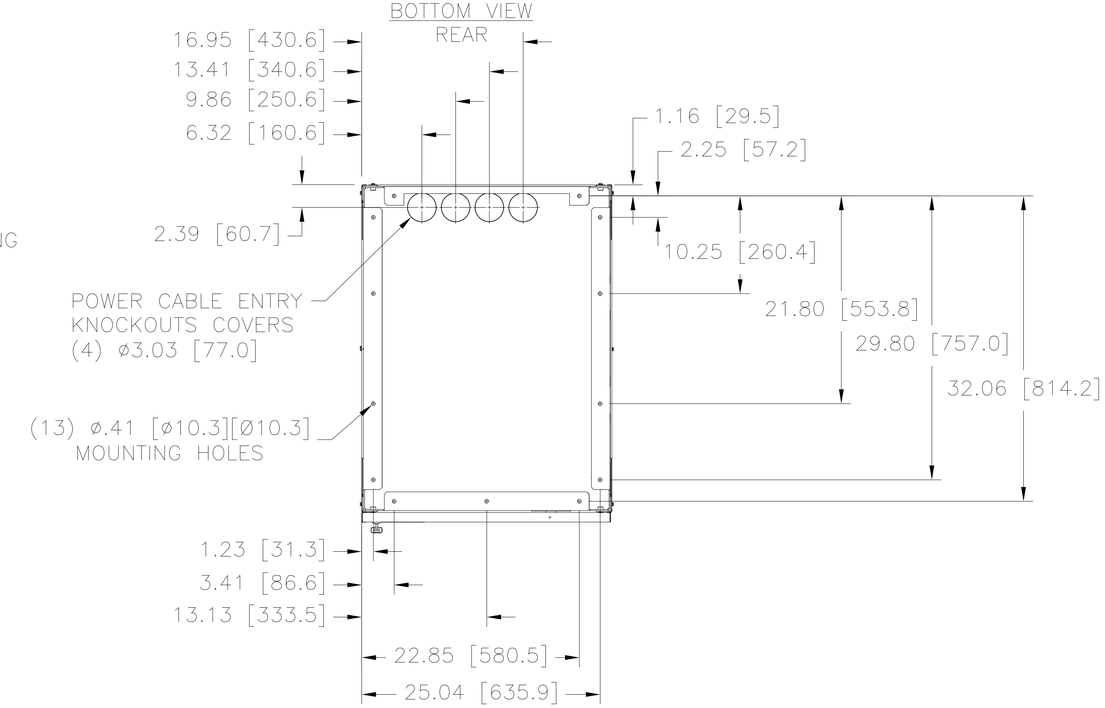

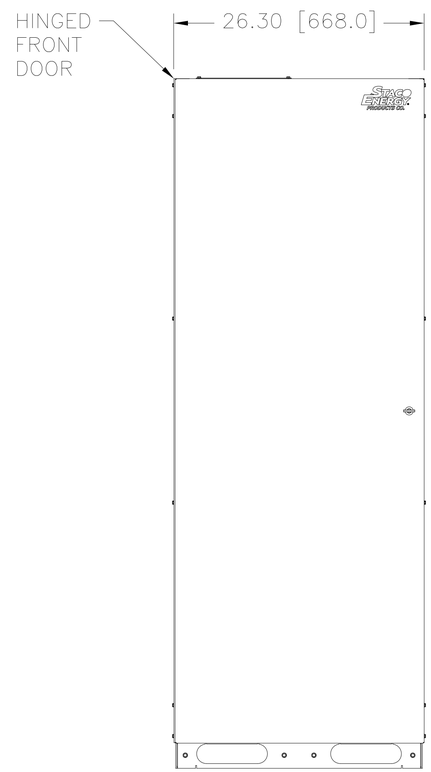

FRONT VIEW

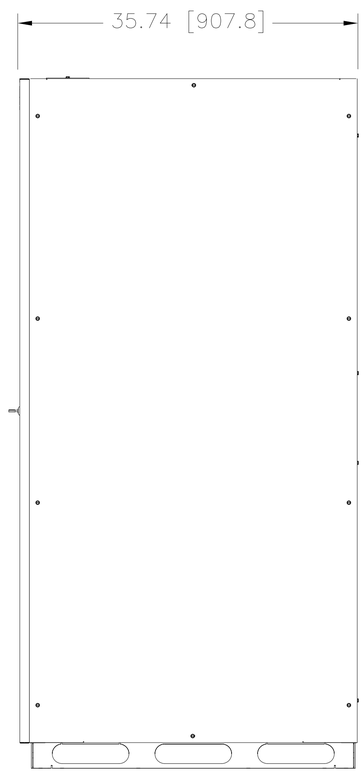

RIGHT SIDE VIEW

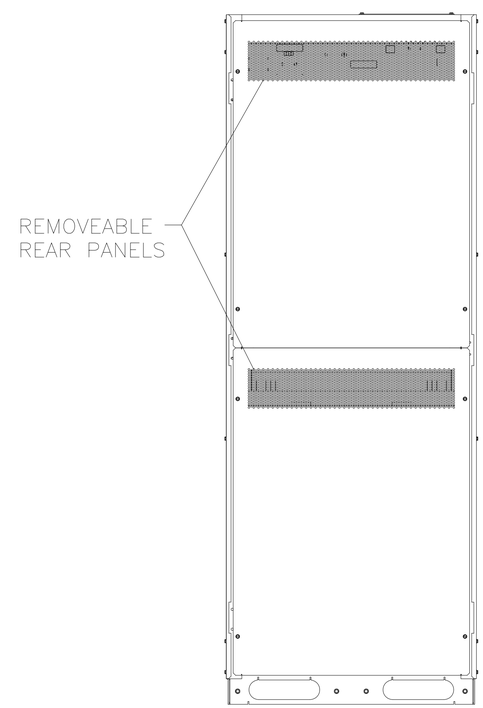

REAR VIEW

SUMMARY OF EQUIPMENT

THE E3 EXTENDED RUN TIME BATTERY CABINET IS USED IN CONJUNCTION WITH THE E3 UPS TO PREVENT THE LOSS OF ELECTRONIC INFORMATION AND MINIMIZE EQUIPMENT DOWN TIME. DURING BROWNOUTS, BLACKOUTS, AND OTHER POWER INTERRUPTIONS. THE BATTERIES PROVIDE EMERGENCY POWER TO SAFEGUARD OPERATION.

THE E3 EXTENDED RUN TIME BATTERY CABINET IS SUPPLIED WITH INTERNAL FUSING. THE CIRCUIT BREAKER, WHEN CONNECTED TO THE UPS, WILL TRIP IF THE EMERGENCY POWER OFF (EPO) BUTTON IS PRESSED.

ENVIRONMENTAL
OPERATING TEMPERATURE: 0°C TO 40°C
ALTITUDE: 0-3300 FEET [1000 METERS] (WITHOUT DERATING)
RELATIVE HUMIDITY: 0-90%, NON-CONDENSING

POWER TERMINAL CONNECTIONS:
BOX COMPRESSION TERMINALS
2/0 - #6 AWG WIRES

UL LISTED TO UL 1778, FILE NO.: E191175

MODEL	CIRCUIT BREAKER RATING (AMPS)	FUSE RATING (AMPS)
E3-BAT-280-40-1-CSST	60	40

UNLESS OTHERWISE SPECIFIED. TOLERANCE IS ±
DECIMALS .XX .010 .XXX .005 | HOLES .005 | ANGLES 1° | DRAFT 1-1/2°

UNITS IN [mm]

MATERIAL :

ALL DIMENSIONS APPLY AFTER PLATING

TITLE: SPEC. CONTROL DRAWING E3-BAT-280-40-X EXTENDED RUN-TIME BATTERY CABINET

STACO ENERGY PRODUCTS CO.
A Components Corporation of America Company
2425 Technical Drive Miamisburg, Ohio 45342 USA

The information and design disclosed herein was originated by and is the property of STACO ENERGY PRODUCTS CO., which reserves all patent, proprietary, design, manufacturing, reproduction, use and sale rights thereto, and to any article disclosed therein except to the extent rights are expressly granted to others. The foregoing does not apply to vendor proprietary parts.

DRAWN BY	DATE	FIRST USED ON	DO NOT SCALE DWG.
R. GILBERT	5/14/25	E3	
CHECKER B. FOX	DATE 6/26/25	WEIGHT APPROX.	CAGE CODE 83008
ENGINEER B. FOX	DATE 6/26/25	SCALE 1:8	SHEET 2 OF 2

DWG. SIZE	DWG. NO.
D	090-3159

DWG. SIZE	DWG. NO.
D	090–3159

REVISIONS

SYM.	E.C.O.	DATE	APVD.
A	RELEASE TO PRODUCTION	5/14/25	

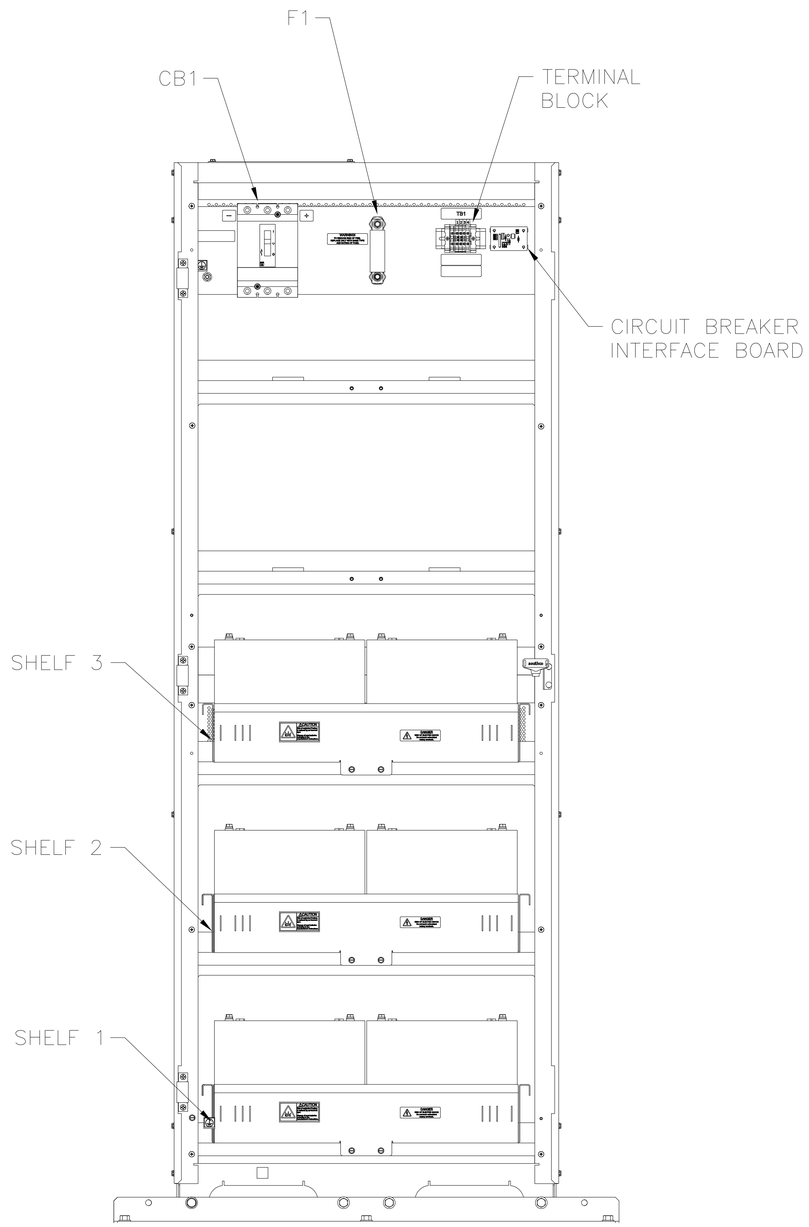

FRONT VIEW
COVERS REMOVED

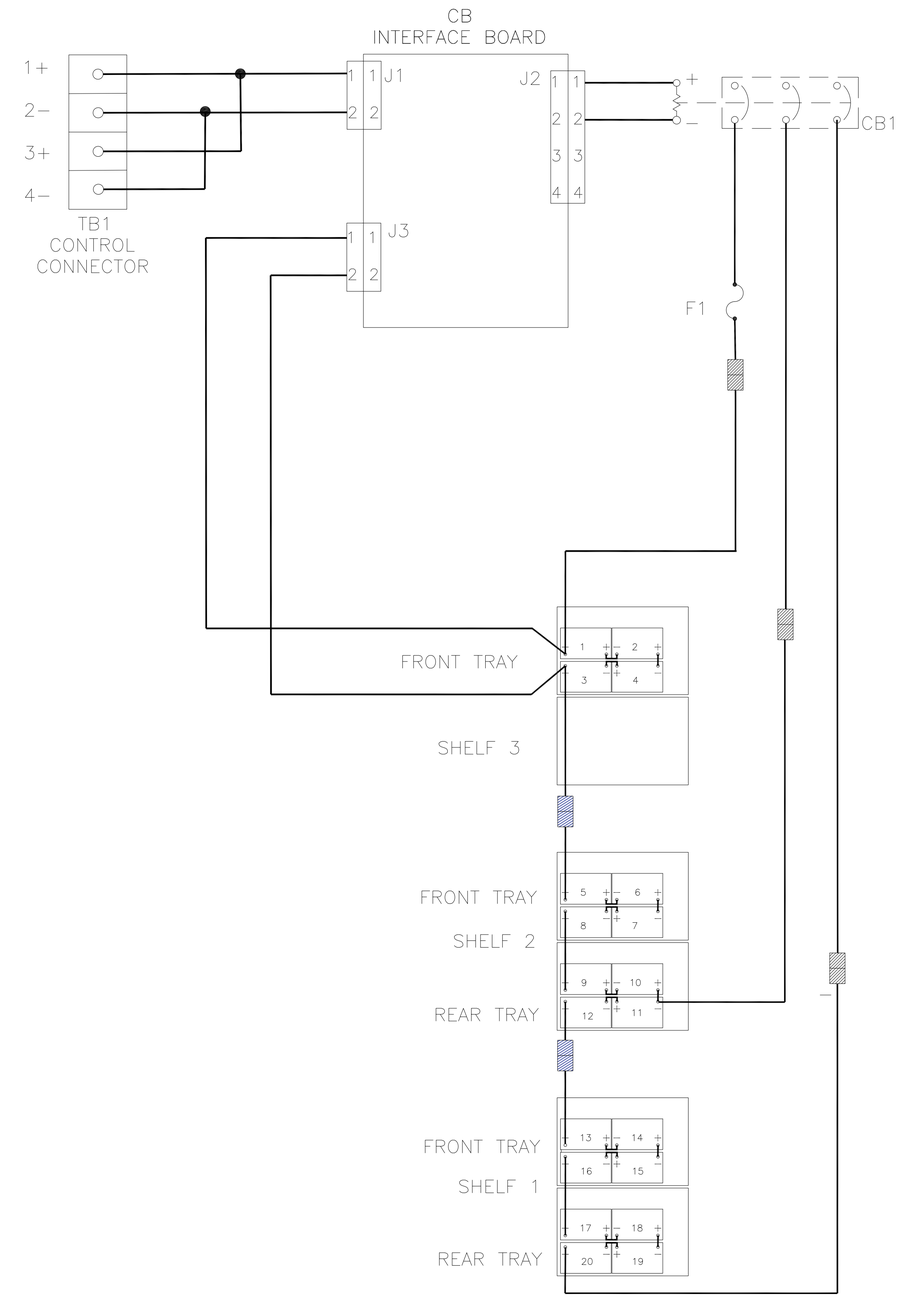

280W 1–STRING

MODEL	CIRCUIT BREAKER RATING (AMPS)	FUSE RATING (AMPS)
E3–BAT–280–40–1–CSST	60	40

UNLESS OTHERWISE SPECIFIED. TOLERANCE IS ±
DECIMALS .XX .010 .XXX .005 — HOLES .005 — ANGLES ±° — DRAFT 1–1/2°

UNITS IN [mm]

MATERIAL :

ALL DIMENSIONS APPLY AFTER PLATING

TITLE: SPEC. CONTROL DRAWING E3–BAT–280–40–X EXTENDED RUN–TIME BATTERY CABINET

STACO ENERGY PRODUCTS CO.
A Components Corporation of America Company
2425 Technical Drive Miamisburg, Ohio 45342 USA

DRAWN BY	DATE	FIRST USED ON	DO NOT SCALE DWG.
R. GILBERT	5/14/25	E3	
CHECKER B. FOX	DATE 6/26/25	WEIGHT APPROX.	CAGE CODE 83008
ENGINEER B. FOX	DATE 6/26/25	SCALE 1:8	SHEET 2 OF 2

DWG. SIZE D — DWG. NO. 090–3159

The information and design disclosed herein was originated by and is the property of STACO ENERGY PRODUCTS CO., which reserves all patent, proprietary, design, manufacturing, reproduction, use and sale rights thereto, and to any article disclosed therein except to the extent rights are expressly granted to others. The foregoing does not apply to vendor proprietary parts.