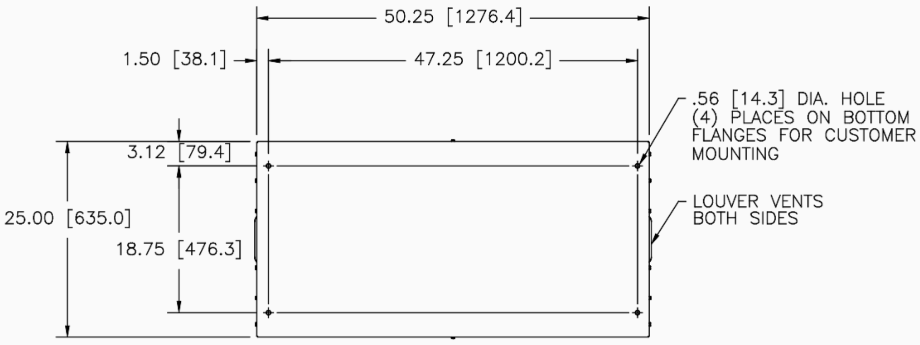

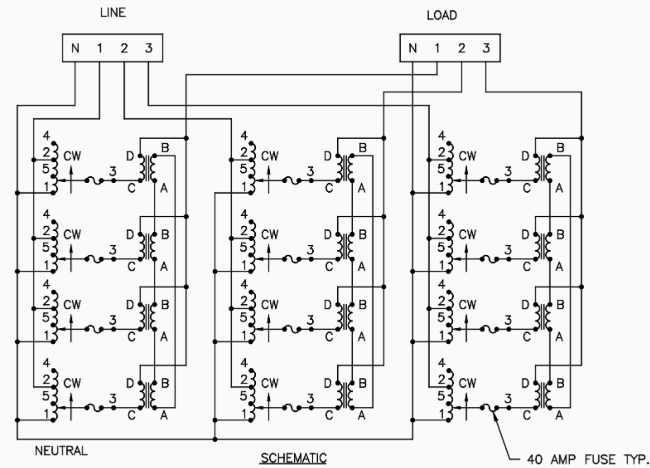

SCHEMATIC

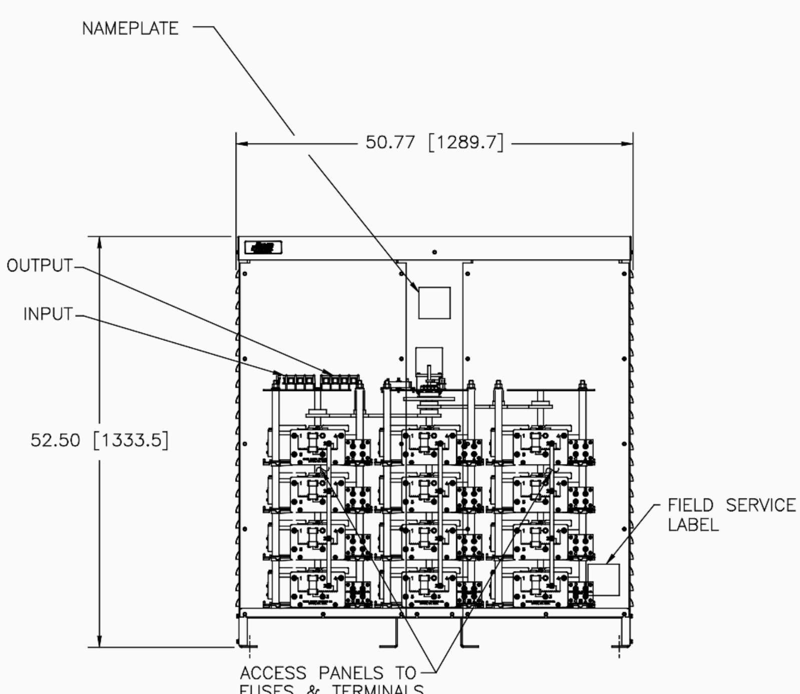

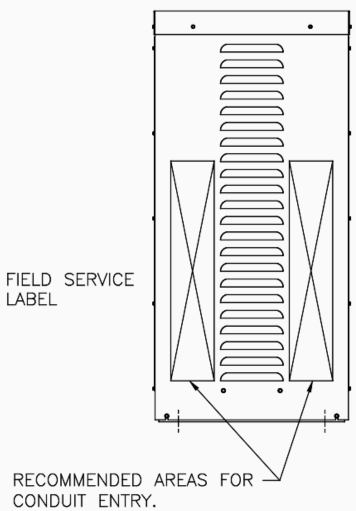

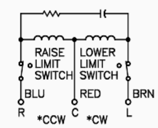

MOTOR CIRCUIT
120V, 50/60 HZ
* ROTATION AS VIEWED FROM TOP END
MOTOR SPEEDS: 60 SEC

DWG. SIZE	DWG. NO.		
D	032-8549		
REVISIONS			
SYM.	E.C.O.	DATE	APVD.
A	RELEASED TO PRODUCTION		

SPECIFICATIONS

WIRING	INPUT		OUTPUT			SHAFT ROTATION FOR VOLTAGE INCREASE	TERMINAL CONNECTIONS FOR INCREASING VOLTAGE AS VIEWED FROM TOP	
	VOLTS	HERTZ	VOLTS	CONSTANT CURRENT LOAD MAX. AMPS	CONSTANT CURRENT LOAD MAX. KVA		INPUT	OUTPUT
THREE PHASE WYE	600	60	0-600	140	145.3	CW	4-4-4	D-D-D
	480	50/60	0-480	140	116.3	CW	4-4-4	D-D-D
		60	0-560	140	135.6	CW	2-2-2	D-D-D

UNLESS OTHERWISE SPECIFIED, TOLERANCE IS ± DECIMALS HOLES ANGLES DRAFT .XX .010 .005 1° 1-1/2° .XXX .005

UNITS IN [mm]

MATERIAL:

ALL DIMENSIONS APPLY AFTER PLATING

TITLE: SPEC. CONTROL DRAWING
MOTORIZED VARIABLE XFMR
TYPE: 60M6020-12Y-600

STACO ENERGY PRODUCTS CO.
A Components Corporation of America Company
2425 Technical Drive Miamisburg, Ohio 45342 USA

The information and design disclosed herein was originated by and is the property of STACO ENERGY PRODUCTS CO., which reserves all patent, proprietary, design, manufacturing, reproduction, use and sale rights thereto, and to any article disclosed therein except to the extent rights are expressly granted to others. The foregoing does not apply to vendor proprietary parts.

DRAWN BY S. FRALEY	DATE 11/27/24	FIRST USED ON	DO NOT SCALE DWG.
CHECKER	DATE	WEIGHT APPROX.	CAGE CODE 83008
ENGINEER L. BRAGG	DATE 12/12/24	SCALE NTS	SHEET 1 OF 1

DWG. SIZE D — DWG. NO. 032-8549