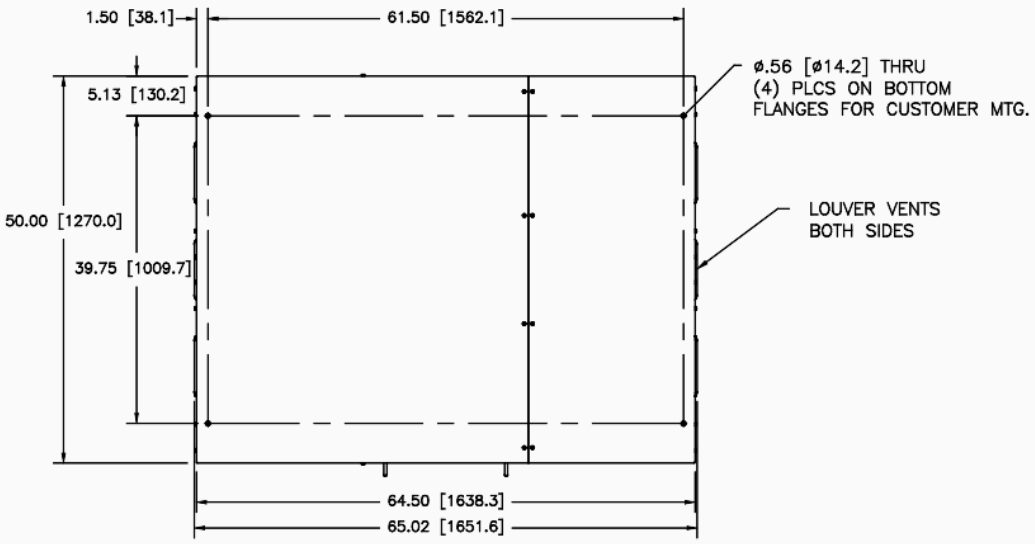
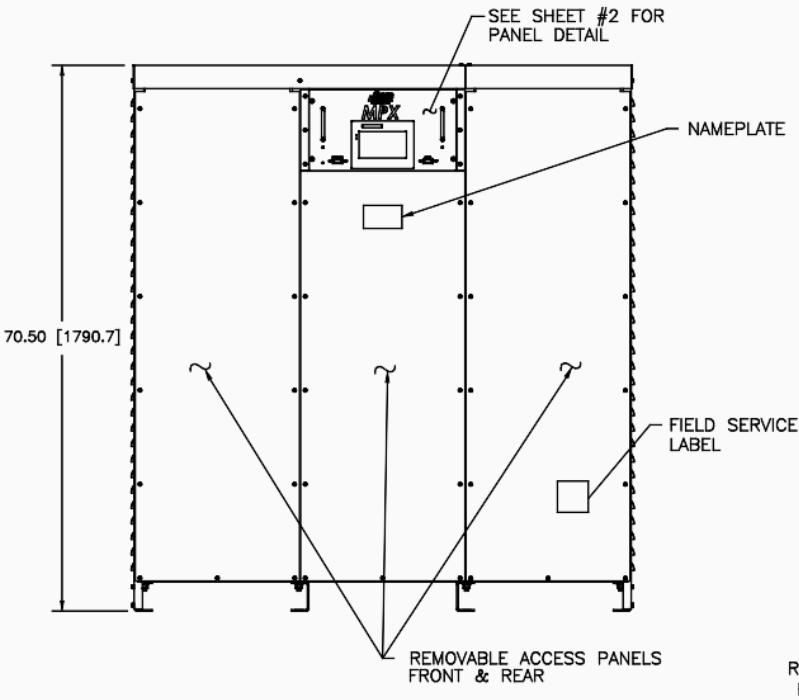
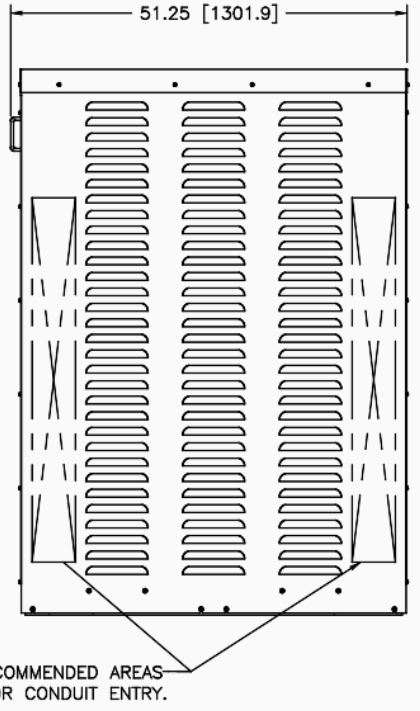
SIZE	DWG. NO.
D	032-8765

REVISIONS			
SYM.	E.C.O.	DATE	APVD.
A		10/15/25 RELEASED	







CONTROLS:
MPX CONTROLLER: THE TERMINAL IS PROVIDED FOR LOCAL CONTROL OF THE UNIT WITH AN INTERACTIVE TOUCHSCREEN DISPLAY FOR PRECISION OUTPUT VOLTAGE READINGS AND REGULATION. SEE THE MPX USER'S HANDBOOK (FORM #003-2753) FOR DETAILED INFORMATION ON EXPANDED AUTOMATION CAPABILITIES.

CONTROLLER ON/OFF SWITCH: THIS SWITCH TURNS OFF POWER TO THE MICROPROCESSOR CONTROLLER ONLY.

MOTOR ON/OFF SWITCH: THIS SWITCH TURNS OFF POWER FROM THE MICROPROCESSOR TO EACH OF THE AUTOTRANSFORMER MOTORS.

RAISE/LOWER SWITCHES: THESE SWITCHES ARE LOCATED INTERNALLY AND ARE ACCESSIBLE FROM THE FRONT VIA THE REMOVABLE ACCESS PANEL. THE SWITCHES ALLOW FOR EACH PHASE OF THE VARIABLE TRANSFORMER TO BE MANUALLY CONTROLLED INDIVIDUALLY.

WIRE RANGES FOR CUSTOMER WIRING:
INPUT/OUTPUT TERMINALS: (2) (500MCM-#4 AWG) COMPRESSION PER PHASE GROUND TERMINAL: (1) (350MCM-#6 AWG) COMPRESSION

SPECIFICATIONS INDIVIDUAL PHASE CONTROL

WIRING	INPUT VOLTS	INPUT HERTZ	OUTPUT VOLTS	OUTPUT CONSTANT CURRENT LOAD MAX. AMPS	OUTPUT CONSTANT CURRENT LOAD MAX. KVA	SHAFT ROTATION FOR VOLTAGE INCREASE	TERMINAL CONNECTIONS FOR INCREASING VOLTAGE AS VIEWED FROM TOP INPUT	TERMINAL CONNECTIONS FOR INCREASING VOLTAGE AS VIEWED FROM TOP OUTPUT
THREE PHASE WYE	480/277	50/60	0-480	350	291	CW	4-4-4	D-D-D
		60	0-560	350	339	CW	2-2-2	D-D-D
	400/230	50	0-480	350	291	CW	2-2-2	D-D-D

UNLESS OTHERWISE SPECIFIED, TOLERANCE IS ± DECIMALS .XX .XXX / FRACTIONS / ANGLES / SHEET 1-1/5+
UNITS IN [mm]
ALL DIMENSIONS APPLY AFTER PLATING
MATERIAL: N/A

TITLE: SPEC. CONTROL DRAWING
VARIABLE TRANSFORMER
MX60M6020E-30Y-IPC

STACO ENERGY PRODUCTS CO.

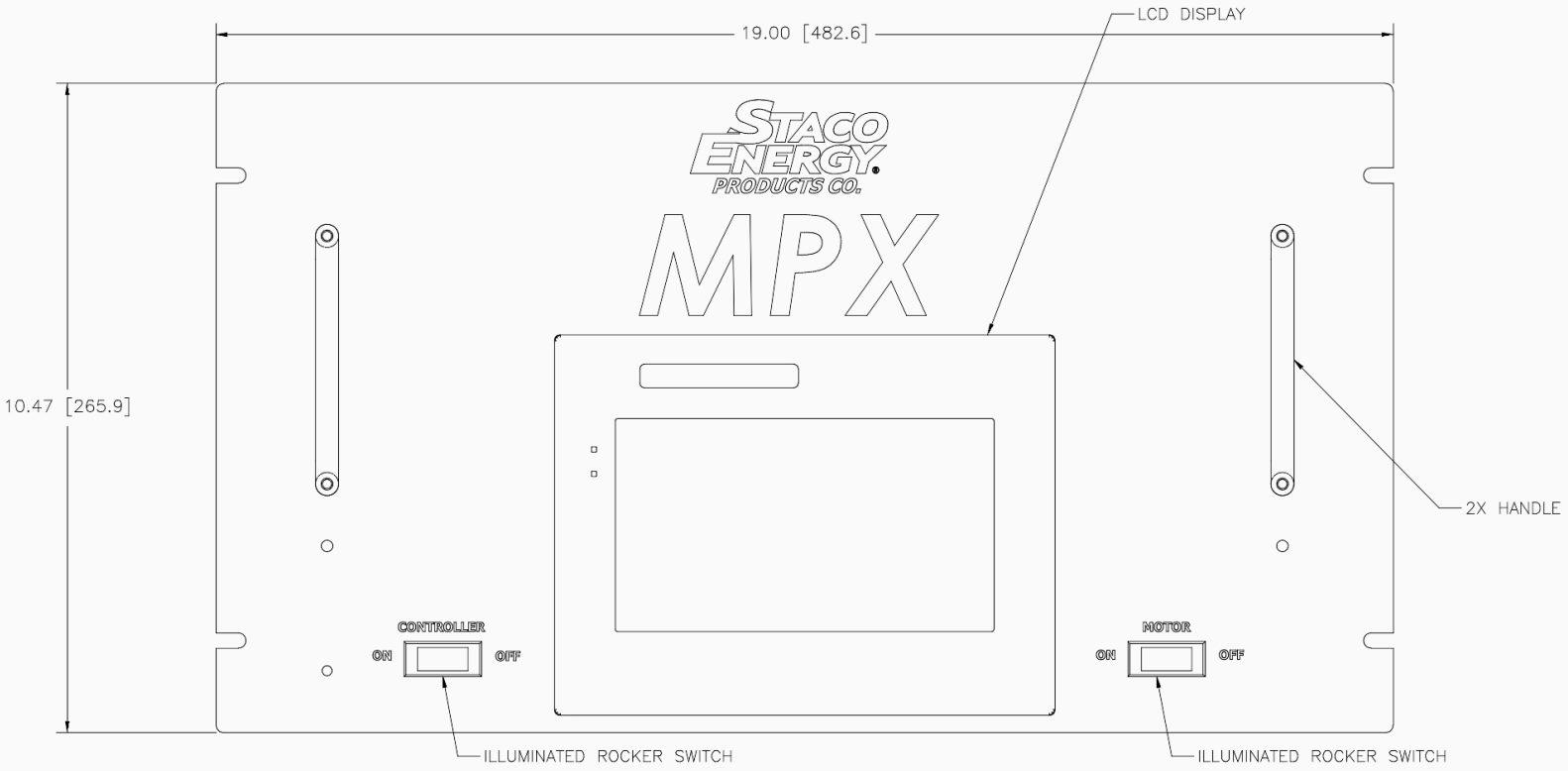
DRAWN BY	DATE	FIRST USED ON	DO NOT SCALE DWG.
BER	10/15/25		
CHECKED B. LIGHTLE	DATE 10/15/25	NEXT ASSY.	CAGE CODE 83006
ENGINEER BER	DATE 10/15/25	SCALE 1/8	SHEET 1 OF 2

SIZE D DWG. NO. 032-8765

The information and design disclosed herein are published by and is the property of STACO ENERGY PRODUCTS CO. with common law copyright rights. It is unpublished and all such rights reserved. This drawing does not apply to vendor proprietary parts.

DWG. SIZE	DWG. NO.
D	032-8765

REVISIONS			
SYM.	E.C.O.	DATE	APVD.
A		10/15/25 RELEASED	



UNLESS OTHERWISE SPECIFIED, TOLERANCE IS ±
DECIMALS .XX .010 .XXX .005 | HOLES .005 | ANGLES 1° | DRAFT 1-1/2°

MATERIAL: N/A

UNITS IN [mm]

ALL DIMENSIONS APPLY AFTER PLATING

The information and design disclosed herein was originated by and is the property of STACO ENERGY PRODUCTS CO., which reserves all patent, proprietary, design, manufacturing, reproduction, use and sale rights thereto, and to any article disclosed therein except to the extent rights are expressly granted to others. The foregoing does not apply to vendor proprietary parts.

TITLE: SPEC. CONTROL DRAWING
VARIABLE TRANSFORMER
MX60M6020E-30Y-IPC

DRAWN BY: BER	DATE: 10/15/25	FIRST USED ON	DO NOT SCALE DWG.
CHECKER: B. LIGHTLE	DATE: 10/15/25	WEIGHT APPROX.	CAGE CODE: 83008
ENGINEER: BER	DATE: 10/15/25	SCALE: 1/1	SHEET 2 OF 2

STACO ENERGY PRODUCTS CO.
A Components Corporation of America Company
3450 Technical Drive Miamisburg, Ohio 45342 USA

DWG. SIZE: D | DWG. NO.: 032-8765